Product Specifications

Flange type:	SAE#3
Flange to ring gear dimension:	2.00"
Number of teeth:	11
Diametral pitch:	6/8
Pinion outside diameter:	2.250"
Pressure angle:	20°
Rotation:	Clockwise
Motor housing:	Aluminum
Pinion housing:	Ductile iron
Barrel:	Steel
Piston:	Bronze Alloy
Number of pistons:	7
Displacement:	2.00 in³/REV
Speed range:	0-4500 RPM
Drive type:	Inertia
Maximum working pressure:	3000 PSI
Duty cycle:	Intermittent
Maximum torque:	72 Ft-lbs
Weight:	35.0 lbs
Overall volumetric efficiency:	92%
Recommended fluid:	Red hydraulic fluid (MIL-H-5606)

CMD-2A-111

Login to view other models

Flow vs. Speed

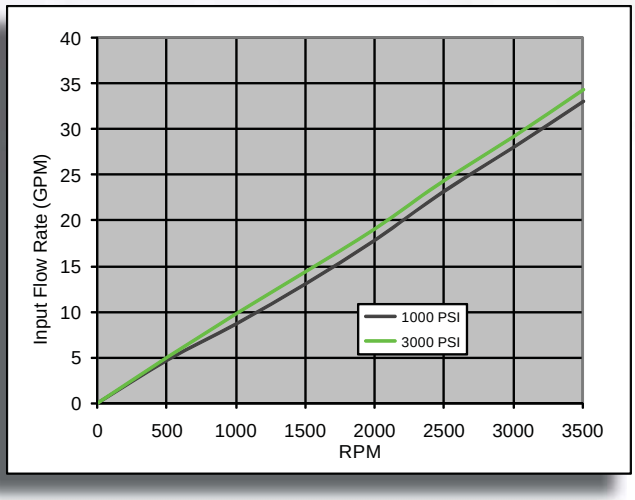

Torque vs. Speed

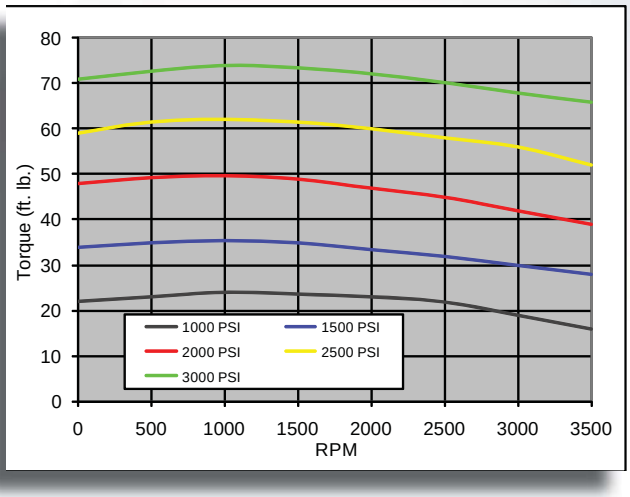

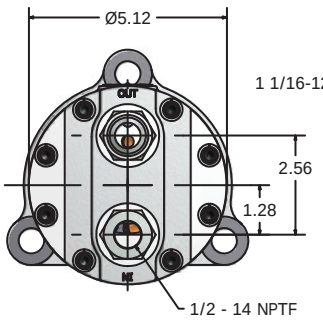

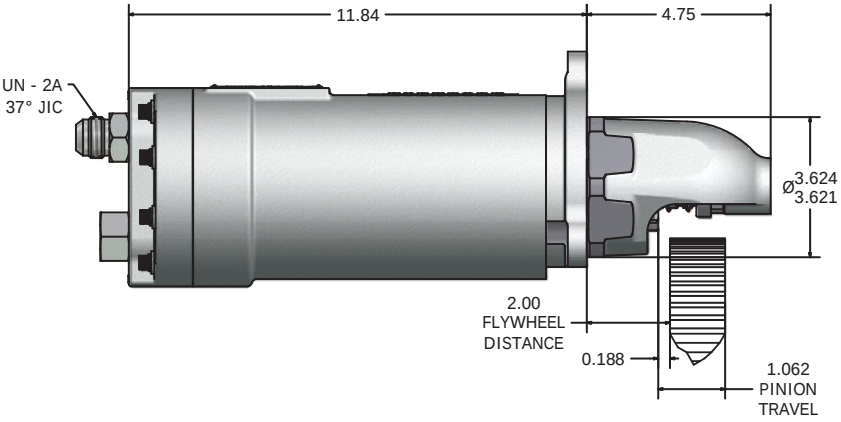

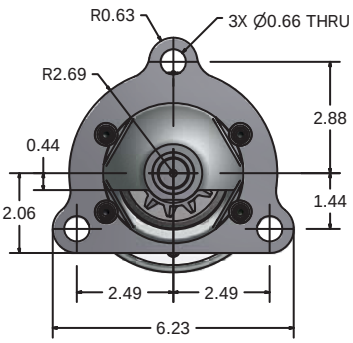

FORM:CMD2A111_A