VCA-308185-1
Solenoid Control Valve

Product Specifications

Housing Material:	Aluminum
Maximum Working Pressure:	3000 psi (206 bar)
Maximum Flow Rate:	40 GPM (151.4 l/min)
Weight:	2.50 lbs. (1.13 kg)
Inlet Connection:	3/4" NPTF
Outlet Connection:	3/4" NPTF

Solenoid Variations

Part Number	Solenoid Specifications
VCA-308185-1	24 VDC
VCA-308185-2	115 VAC
VCA-308185-3	12 VDC

NEMA 7 Rated
Class 1, Division 1

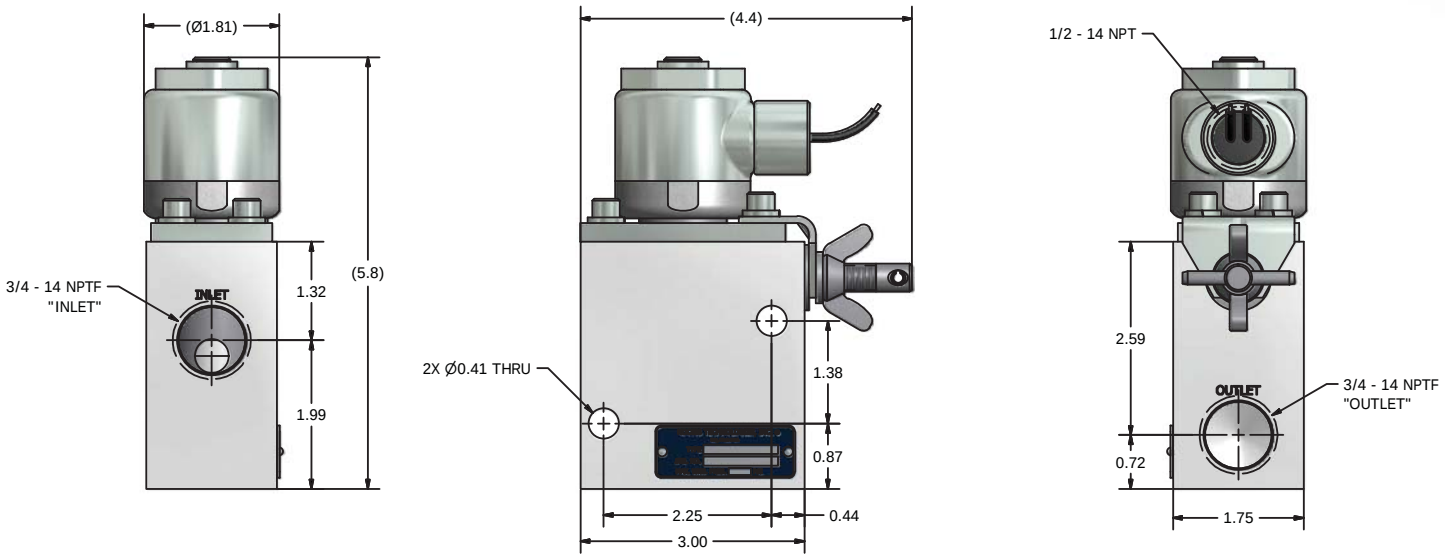

FORM: SAV7_B