# RPA-308196-C

## Product Specifications

| | |
|---|---|
| Pump Type: | Fixed Displacement Piston Type |
| Rotation: | CW or CCW |
| Speed: | 600 RPM to 3000 RPM* |
| Unloading Valve: | Integral and Pressure Adjustable |
| Normal Pressure Cut Out: | 3000 psi (207 bar) |
| Normal Pressure Cut In: | 2500 psi (172 bar) |
| Weight: | 7.0 lbs. (3.2 kg) |
| MAWP: | 3000 psi (207 bar) |
| Recommended Fluid: | Red hydraulic fluid (MIL-H-5606) |
| Inlet Connection: | 3/8" NPTF |
| Outlet Connection: | 1/4" NPTF |
| Dump Connection: | 1/4" NPTF |
| Output Shaft: | 13 Tooth Spline |
| Flange: | 2 Bolt, SAE B |

*Operation at speeds in excess of 3000 RPM may result in pump damage. Please consult factory on high speed applications.

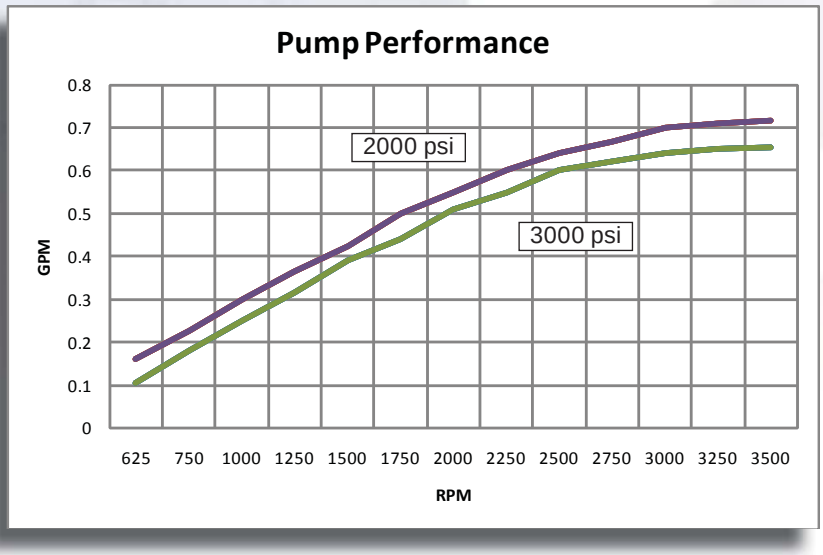


## Mounting Specifications

| Model | Mounting Flange | | | Drive Shaft | |
|---|---|---|---|---|---|
| | ANSI | USA | SAE | ANSI | (SAE)* |
| RPA-308196-C | 101-2 | 2F40 | B | 22-4 | (B) |

*Reference letters indicate the matching SAE mounting flange

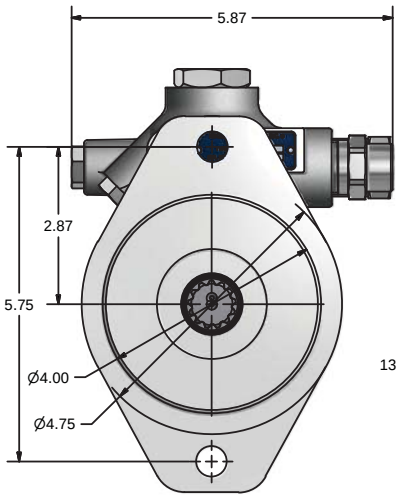


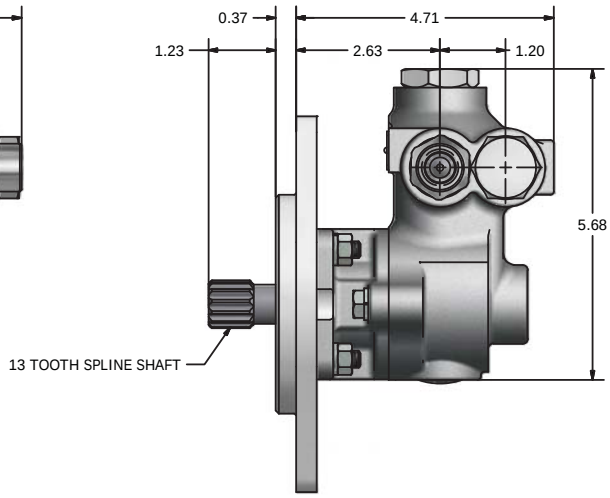


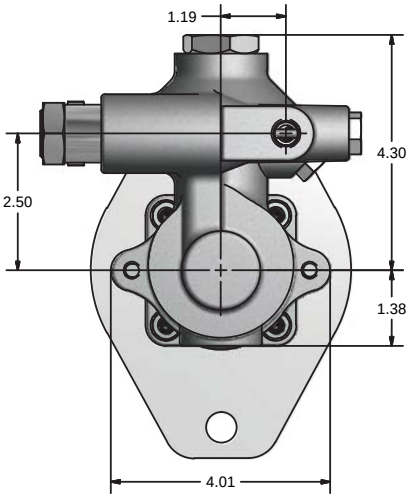


FORM: RPA308196C_A