# VCA-300378
## Manual Control Valve

### Product Specifications

| | |
|---|---|
| Housing Material: | Aluminum |
| Lever Material: | Steel |
| Maximum Working Pressure: | 3000 psi (206 bar) |
| Maximum Flow Rate: | 35 GPM (132.5 l/min) |
| Weight: | 2.40 lbs. (1.09 kg) |
| Inlet Connection: | 3/4” NPTF |
| Outlet Connection: | 3/4” NPTF |

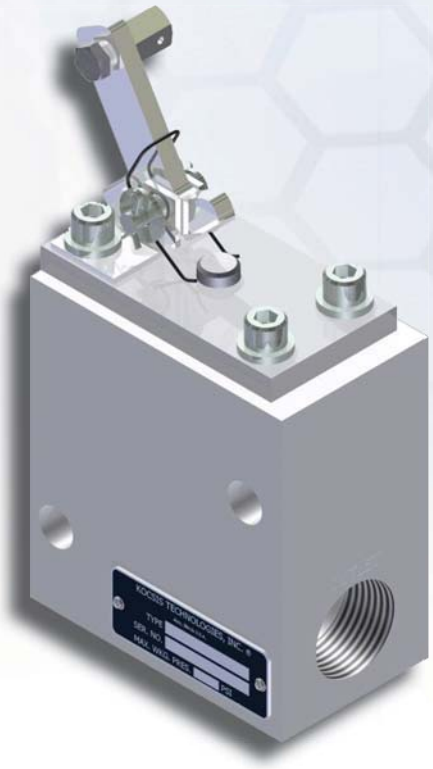

Also offered in
Ductile Iron
KTI Part Number:
**VCA-308170**

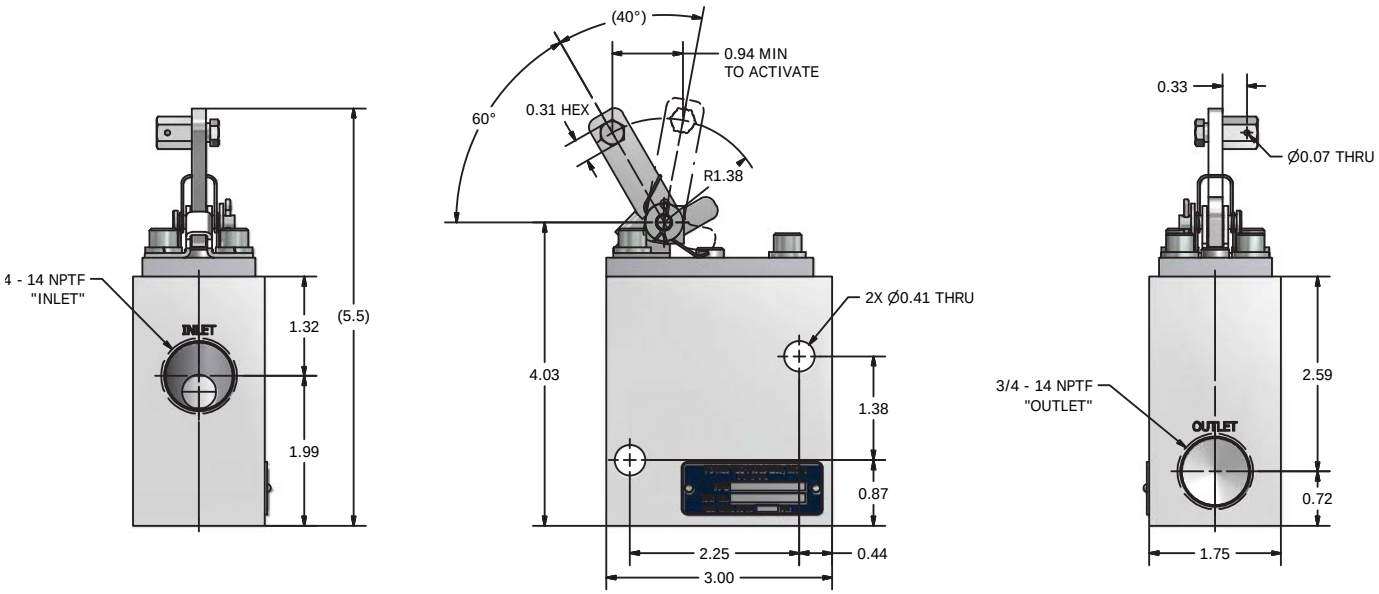


FORM: CAV_A